CAE_G-6Ai2Ao2Ai4Tmp-02-RB

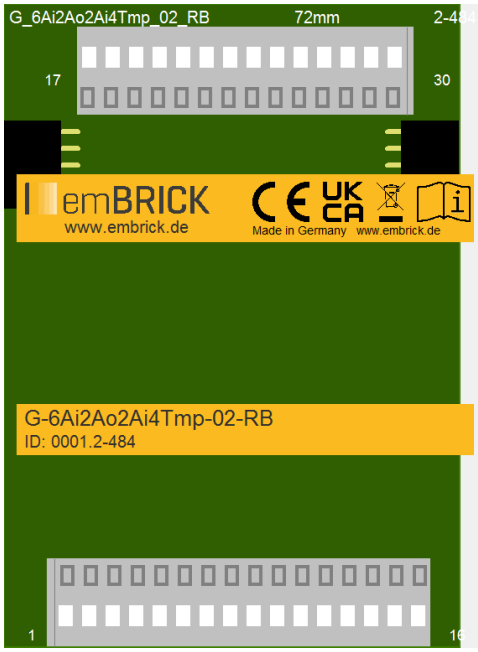

1.1 Description

ID: 2-484
Order No.: CAE_6Ai2Ao2Ai4Tmp-02 RB
Terminal: push-in (for ≤ 1.5mm²)
Size: 72 x 90 (96) mm
BBFCP: 2-1-1
Weight: 150g

This brick offers an I/O-mix of 6 analog current inputs, 1 voltage (0..10V) and 1 current (0..20mA) output. Moreover 2 analog voltage inputs and 4 temperature inputs.
It is enclosed in a rail box.

1.2 Connectors and Indication-/Operation-Elements

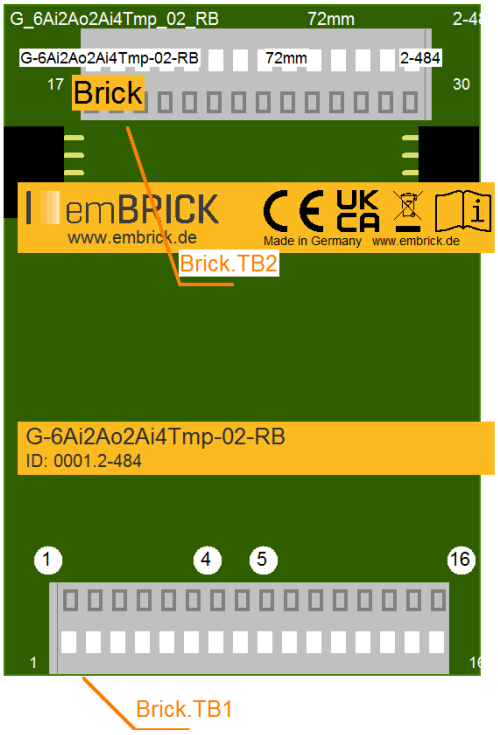

1.2.1 Connectors (X)

Hereinafter the necessary connections, connectors and there specification for operation are listed. The location of a specific connector is documented with the ID (left coloumn) in the previous Illustrations.

ID	Model	Usage	Num. of term.	Model / Series	connection	elec. usage
Brick.X01	Flachstecker	ground connenction	1	6,3x0,8mm liegend	min. 1,5mm²	aux. ground

1.2.2 Terminal block (TB)

The following Illustration the technical details for Terminal blocks are listed. The location of a specific block is documented with the ID (left coloumn) in the preavious Illustrations.

ID	Model	Model / Series	Grid	Num. of term.	connection	elec. usage
Brick.TB1	Cage Terminal	WAGO250	3.5mm	16	up to 1.5mm²	signal level
Brick.TB2	Cage Terminal	WAGO250	3.5mm	14	up to 1.5mm²	signal level

1.2.3 Terminal assignment

Here the assignment of individual terminals and there affilation to terminal blocks (Te block), terminal numbers (Te no.) and short description (T.desc.) aswell as there electrical function and usage are explained.
The associated mechanical and electrical properties are stated with the specific terminal block in the previous chapter. The position of a terminal is dedicated through the "Te block" and the actual terminal number (Te no.) or the therminal description (T.descr.) in the previous Illustration respectivly.
In the coloumn "usage" the technical-/ device-functional use is listed.

Te block	Te no.	T. descr.	Function	Usage
Brick.TB00	0	24V	Sensor supply +24V	Ai1
Brick.TB00	1	IN	Input	Ai1
Brick.TB00	2	0V	Ground	Ai1
Brick.TB00	3	24V	Sensor supply +24V	Ai2
Brick.TB00	4	IN	Input	Ai2
Brick.TB00	5	0V	Ground	Ai2
Brick.TB00	6	24V	Sensor supply +24V	Ai3
Brick.TB00	7	IN	Input	Ai3
Brick.TB00	8	0V	Ground	Ai3
Brick.TB00	9	24V	Sensor supply +24V	Ai4
Brick.TB00	10	IN	Input	Ai4
Brick.TB00	11	0V	Ground	Ai4
Brick.TB00	12	24V	Sensor supply +24V	Ai5
Brick.TB00	13	IN	Input	Ai5
Brick.TB00	14	0V	Ground	Ai5
Brick.TB00	15	24V	Sensor supply +24V	Ai6
Brick.TB00	16	IN	Input	Ai6
Brick.TB00	17	0V	Ground	Ai6
Brick.TB00	18	OUT	Voltage Output	Ao1
Brick.TB00	19	0V	Ground	Ao1
Brick.TB00	20	OUT	Current Output	Ao2
Brick.TB00	21	0V	Ground	Ao2
Brick.TB00	22	24V	Sensor supply +24V	Ai7
Brick.TB00	23	IN	Input	Ai7
Brick.TB00	24	0V	Ground	Ai7
Brick.TB00	25	24V	Sensor supply +24V	Ai8
Brick.TB00	26	IN	Input	Ai8
Brick.TB00	27	0V	Ground	Ai8
Brick.TB00	28	Tmp	Input Temperature Sensor	Temp1
Brick.TB00	29	0V	Ground	Temp1
Brick.TB00	30	Tmp	Input Temperature Sensor	Temp2
Brick.TB00	31	0V	Ground	Temp2
Brick.TB00	32	Tmp	Input Temperature Sensor	Temp3
Brick.TB00	33	0V	Ground	Temp3
Brick.TB00	34	Tmp	Input Temperature Sensor	Temp4
Brick.TB00	35	0V	Ground	Temp4

1.2.4 LED Indications

ID	Type	Specification	Type / Usage
Brick.StateLED	SMD-LED	yellow	communicationstate Brick

1.3 Input-/Output Scheme

The following diagram shows the adaption of the control unit. To avoid overlapping, some wires are displayed interrupted and dashed.

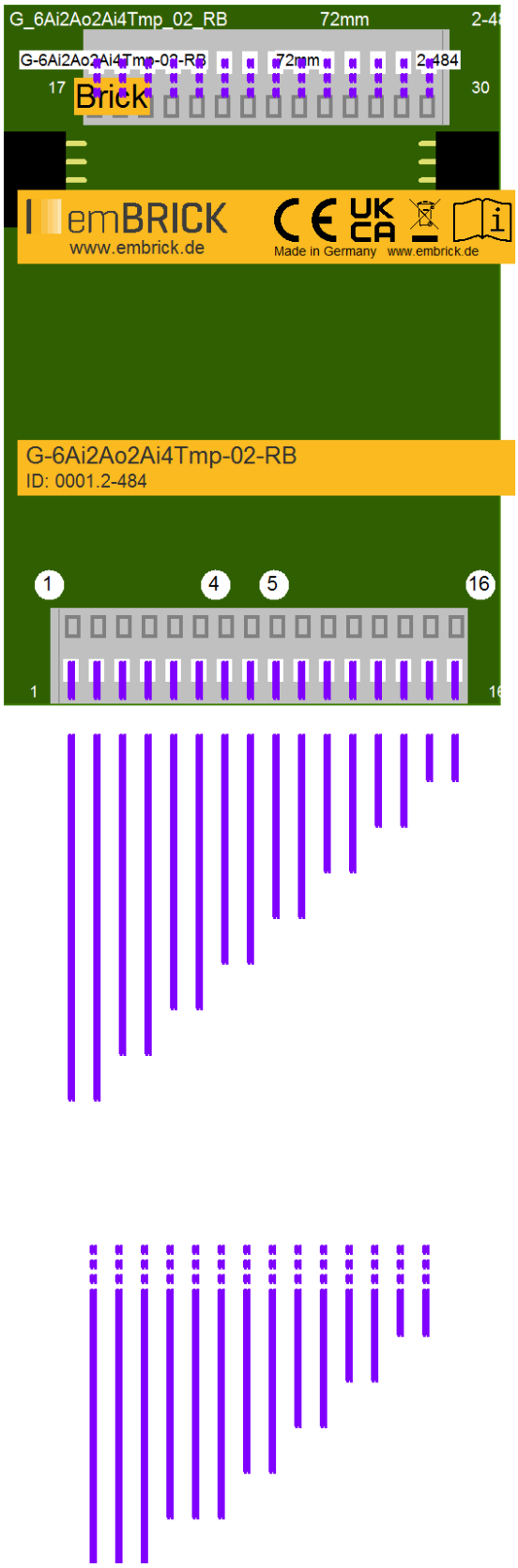

1.4 Technical Data

1.4.1 Analog Inputs

The control unit has the following analogue inputs / measuring inputs:

Identifier	Ai1
Type	Current Input
Range	0 ... 20mA, 2/3-wire
Input/Load Resistor	175 Ohm
Resolution	10Bit
Accuracy	0.5%
Linearity	0.2%
Filter	-
Linearization	-
Model / Series	-
Remark	-

Identifier	Ai2
Type	Current Input
Range	0 ... 20mA, 2/3-wire
Input/Load Resistor	175 Ohm
Resolution	10Bit
Accuracy	0.5%
Linearity	0.2%
Filter	-
Linearization	-
Model / Series	-
Remark	-

Identifier	Ai3
Type	Current Input
Range	0 ... 20mA, 2/3-wire
Input/Load Resistor	175 Ohm
Resolution	10Bit
Accuracy	0.5%
Linearity	0.2%
Filter	-
Linearization	-
Model / Series	-
Remark	-

Identifier	Ai4
Type	Current Input
Range	0 ... 20mA, 2/3-wire
Input/Load Resistor	175 Ohm
Resolution	10Bit

Accuracy	0.5%
Linearity	0.2%
Filter	-
Linearization	-
Model / Series	-
Remark	-

Identifier	Ai5
Type	Current Input
Range	0 ... 20mA, 2/3-wire
Input/Load Resistor	175 Ohm
Resolution	10Bit
Accuracy	0.5%
Linearity	0.2%
Filter	-
Linearization	-
Model / Series	-
Remark	-

Identifier	Ai6
Type	Current Input
Range	0 ... 20mA, 2/3-wire
Input/Load Resistor	175 Ohm
Resolution	10Bit
Accuracy	0.5%
Linearity	0.2%
Filter	-
Linearization	-
Model / Series	-
Remark	-

Identifier	Ai7
Type	Voltage Input
Range	0 ... 40V, 2/3-wire
Input/Load Resistor	>50k
Resolution	
Accuracy	0.5%
Linearity	0.2%
Filter	100Hz
Linearization	
Model / Series	
Remark	Sensor power supply (24V) is provided; note overall capacity

Identifier	Ai8
Type	Voltage Input
Range	0 ... 40V, 2/3-wire

Input/Load Resistor	>50k
Resolution	
Accuracy	0.5%
Linearity	0.2%
Filter	100Hz
Linearization	
Model / Series	
Remark	Sensor power supply (24V) is provided; note overall capacity

Identifier	Temp1
Type	PT1000, -50...350°C
Range	-50 ... 350°C
Input/Load Resistor	-
Resolution	0.1%
Accuracy	2%
Linearity	1%
Filter	Tau = 1s
Linearization	-
Model / Series	PT1000
Remark	

Identifier	Temp2
Type	PT1000, -50...350°C
Range	-50 ... 350°C
Input/Load Resistor	-
Resolution	0.1%
Accuracy	2%
Linearity	1%
Filter	Tau = 1s
Linearization	-
Model / Series	PT1000
Remark	

Identifier	Temp3
Type	PT1000, -50...350°C
Range	-50 ... 350°C
Input/Load Resistor	-
Resolution	0.1%
Accuracy	2%
Linearity	1%
Filter	Tau = 1s
Linearization	-
Model / Series	PT1000
Remark	

Identifier	Temp4

Type	PT1000, -50...350°C
Range	-50 ... 350°C
Input/Load Resistor	-
Resolution	0.1%
Accuracy	2%
Linearity	1%
Filter	Tau = 1s
Linearization	-
Model / Series	PT1000
Remark	

1.4.2 Analog Outputs

The control unit has the following analog outputs:

Identifier	Ao1
Type	voltage output, 2/3 wire
Range	0 ... 10V
max. Voltage	
max. Current	
Filter	
Component	
Remark	

Identifier	Ao2
Type	Current Output
Range	0 ... 20mA
max. Voltage	Vo < 12V
max. Current	25mA
Filter	1st order, fcut off = approx. 2Hz
Component	-
Remark	Load Resistor 0...600 Ohm

1.4.3 User Notes

• Blinking behavior StateLED:
Each Morse code is 3 seconds long!
not initialized = flashing continuously at approx. 5Hz
no communication = short-long-short
too little communication = short-short-short
disturbed communication = short-long-long

OK = continuous flashing at approx. 1Hz (0.6-1.5Hz)

1.5 History

On the following page you will find a list of changes that have been made to the product.

1.5.1 History

Date	Entry scope (HW, SWappl, SWapi, Release)	Entry type (Enhancement, Improvement, Bugfix, Release)	Version	Status (development, implemented, tested)	Responsible	Reason for the modification	Items of the modification	Impact for (end-)customer	Comment	location in model/source
xxxx-xx-xx		Release	0.99	tested	NSt					

For questions please contact:

emBrick GmbH	Alfred-Nobel-Straße 2 D-55411 Bingen am Rhein	+49 (0)6721-48035-70	https://www.embrick.de/ https://www.embrick.de/shop/ support@embrick.de